Electrolux PROFESSIONAL

High Productivity Cooking Steam Tilting Boiling Pan, 150lt Wall mounted, Electronic-Marine

ITEM #

MODEL #

NAME #

SIS #

AIA #



587181 (PBOT15SVJO) Steam tilting Boiling Pan 150lt with electronic steam control, GuideYou panel, wall mounted - Marine

Short Form Specification

Item No.

AISI 304 stainless steel construction. Deep drawn vessel in AISI 316 stainless steel. Insulated and counterbalanced lid. Motorized tilting with variable speed control. Pan can be tilted beyond 90° to completely empty the food. Food is uniformly heated via the base and the side walls of the pan by an indirect heating system using integrally generated saturated steam at a maximum temperature of 125°C in a jacket with an automatic deaeration system. Safety valve avoids overpressure of the steam in the jacket. Safety thermostat protects against low water level in the double jacket. TOUCH control panel. Possibility to store recipes in single or multiphase cooking process, with different temperature settings. Built in temperature sensors for precise control of cooking process. IPX6 water resistant. Configuration: wall mounted.

APPROVAL:

Main Features

- Kettle is suitable to boil, steam, poach, braise or simmer all kinds of produce.
- Produce is uniformly heated in the vessel by an indirect heating system using saturated steam.
- Kettle is jacketed up to 159 mm from upper rim.
- Isolated upper well rim avoids risk of harm for the user.
- Max pressure of inner jacket at 1,5 bar; minimum working pressure at 0.5 bar.
- Ergonomic vessel dimensions, with a large diameter and shallow depth facilitates stirring and gentle food handling.
- Edge of the large pouring lip can be equipped with a strainer (option).
- Built in temperature sensor to precisely control the cooking process.
- Motorized, variable pan tilting with "SOFT STOP". Tilting and pouring speeds can be precisely adjusted. Pan can be tilted over 90° to facilitate pouring and cleaning operations.
- USB connection to easily update the software, upload/download recipes and download HACCP data.
- IPX6 water resistant.

Construction

- Cooking vessel in 1.4435 (AISI 316L) stainless steel featuring directional pouring lip. Double-jacket in 1.4404 (AISI 316L) stainless steel designed to operate at a pressure of 1.5 bar.
- External panelling and internal frame made of 1.4301 (AISI 304) stainless steel.
- Double-lined insulated lid in 1.4301 (AISI 304) stainless steel mounted on the cross beam of the unit, counterbalanced by a hinge that remains open in all positions.
- Safety valve avoids overpressure of the steam in the double jacket.
- External steam feeding; 1,5 bars working pressure.
- Safety thermostat protects against low water level in the double jacket.
- Water mixing tap is available as optional accessory to make water filling and pan cleaning easier.
- Ergonomic and user friendly thanks to the high tilting position and the pouring lip design which allow to easily fill containers.
- Front-mounted inclined led "TOUCH" control panel with recessed deep drawn casing, features self-explanatory display functions which guide operator throughout the cooking process: simultaneous display of actual and set temperature as well as set cooking time

and remaining cooking time; real time clock; "SOFT" control for gentle heating up for delicate food; 9 power simmering levels from gentle to heavy boiling; timer for deferred start; error display for quick trouble-shooting.

- Minimised presence of narrow gaps for easier cleaning of the sides to meet the highest hygiene standards.
- Can be prearranged for energy optimisation or external surveillance systems (optional).
- Possibility to store recipes in single or multiphase cooking process, with different temperature settings.
- 98% recyclable by weight; packaging material free of toxic substances.
- GuideYou Panel - activated by the user via settings – to easily follow the multiphase recipes, granting a proper and controlled cooking and a better appliance optimization.
  The system will provide maintenance reminders, in line with ESSENTIA program, helping the user to properly take care of the product, avoiding downtimes.
- Highly-visible and bright led TOUCH control panel features user-friendly icons and intuitive self-explanatory command options. Display visualizes:
  - Actual and set temperature
  - Set and remaining cooking time
  - Pre-heating phase (if activated)
  - GuideYou Panel (if activated)
  - Deferred start
  - Soft Function to reach the target temperature smoothly
  - 9 Power Control levels from simmering to fierce boiling
  - Pressure mode (in pressure models)
  - Stirrer ON/OFF settings (in round boiling models)
  - Error codes for quick trouble-shooting
  - Maintenance reminders

Optional Accessories

• Strainer for 150lt tilting boiling pans	PNC 910004	❑
• Basket for 150lt boiling pans (diam. 670mm)	PNC 910024	❑
• Base plate for 150lt boiling pans	PNC 910034	❑
• Measuring rod for 150lt tilting boiling pans	PNC 910045	❑
• Strainer for dumplings for 150lt boiling pans	PNC 910055	❑
• Food tap strainer for tilting boiling pans	PNC 911966	❑
• C-board (length 1300mm) for tilting units - factory fitted	PNC 912185	❑
• Connecting rail kit for appliances with backsplash, 900mm	PNC 912499	❑
• Automatic water filling (hot and cold) for tilting units - to be ordered with water mixer - factory fitted	PNC 912735	❑
• Kit energy optimization and potential free contact - factory fitted	PNC 912737	❑
• Mainswitch 25A, 2.5mm² - factory fitted	PNC 912739	❑
• Spray gun for tilting units - against wall (height 400mm) - factory fitted	PNC 912775	❑
• Food tap 2" for tilting boiling pans (PBOT) - factory fitted	PNC 912779	❑
• Emergency stop button - factory fitted	PNC 912784	❑
• Mixing tap with drip stop, two knobs, 685mm height, 600mm swivelling depth for PBOT/PFET - factory fitted	PNC 913556	❑
• Connectivity kit for ProThermetic Boiling and Braising Pans ECAP - factory fitted	PNC 913577	❑

The company reserves the right to make modifications to the products without prior notice. All information correct at time of printing.

High Productivity Cooking Steam Tilting Boiling Pan, 150lt Wall mounted, Electronic-Marine

Front

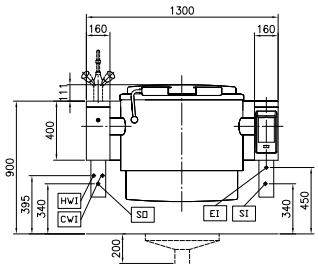

Side

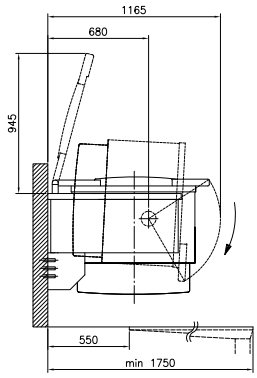

CWI1 = Cold Water inlet 1 (cleaning)
EI = Electrical inlet (power)
HWI = Hot water inlet
SI = Steam inlet
SO = Steam outlet

Top

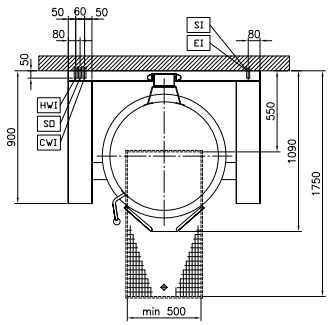

Electric

Supply voltage:	230 V/1 ph/50/60 Hz
Total Watts:	0.2 kW

Steam

Steam generation:	External source
Steam inlet size:	3/4"
Steam pressure Max:	1.5 bar
Steam supply, relative dynamic pressure:	1 min bar, 1.5 max bar

Water:

Pressure, min-max:	2-6 bar

Installation:

Type of installation:	Wall mounted

Key Information:

Working Temperature MIN:	50 °C
Working Temperature MAX:	110 °C
Vessel (round) diameter:	710 mm
Vessel (round) depth:	465 mm
External dimensions, Width:	1300 mm
External dimensions, Depth:	900 mm
External dimensions, Height:	400 mm
Net weight:	260 kg
Configuration:	Round;Tilting
Net vessel useful capacity:	150 lt
Tilting mechanism:	Automatic
Double jacketed lid:	✓
Heating type:	Indirect

Sustainability

Steam consumption:	65 kg/hr

The company reserves the right to make modifications to the products without prior notice. All information correct at time of printing.

2026.10.23